Product installation diagrams
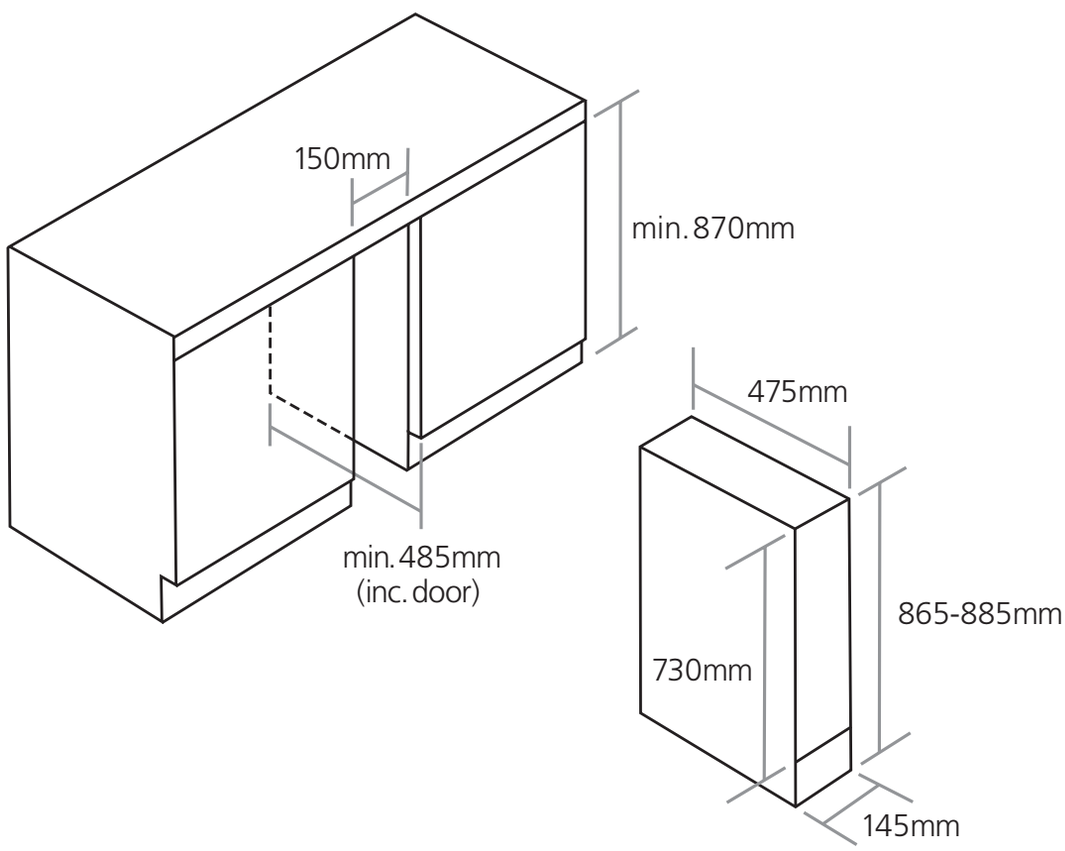
Models:
Wi155